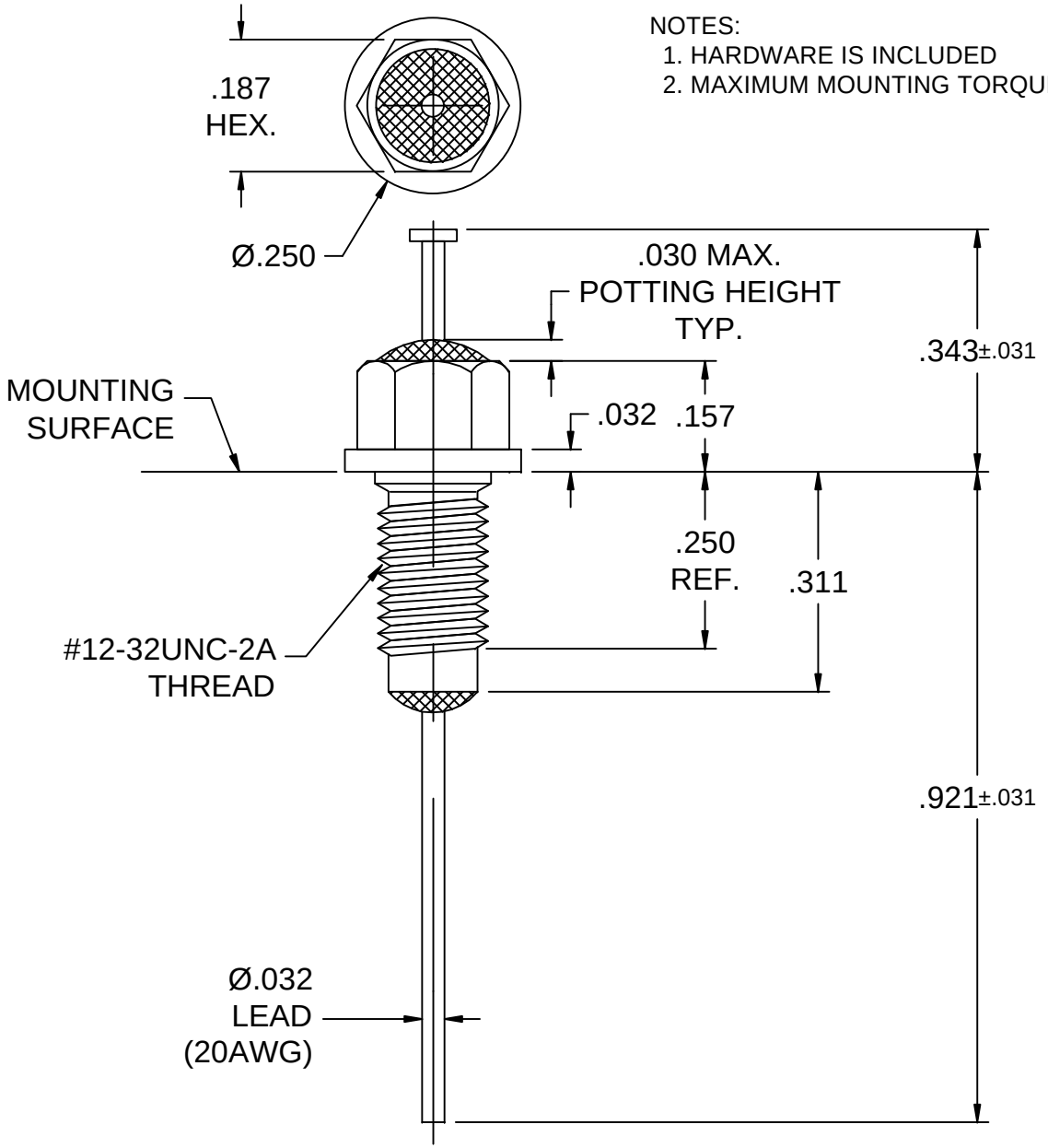

NOTES:
1. HARDWARE IS INCLUDED
2. MAXIMUM MOUNTING TORQUE: 6 IN-LBS

LEAD FINISH	SILVER
BUSHING FINISH	SILVER
CAPACITANCE	0.1uF MIN.
TEMP. RANGE	-55°C TO +125°C
CURRENT	10 AMP MAX.
WORKING VOLTAGE	85°C 100 VDC MAX. 125°C 100 VDC MAX.
DC RESISTANCE	.01ohms MAX.

MIN. I.L. PER MIL-STD-220 AT 25°C NO LOAD

FREQ. MHz	I.L. (db)
1	10
3	40
10	65
100	70
1 GHz	70
10 GHz	70

SCHEMATIC

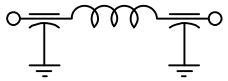

MARKING:

PART: SCIF-3313-000
BAG:
SCIF-3313-000
DATE CODE
LOT #
02
QTY.(200 PCS. MAX.)

RoHS
COMPLIANT

REV NO	CHANGE NOTICE
02	CN #2640
01	CN 39412-ENG
00	CN 34716-CPD

UNLESS OTHERWISE SPECIFIED DIMENSIONS ARE IN INCHES
[MILLIMETERS]
DO NOT SCALE
THIRD ANGLE PROJECTION

TOLERANCES UNLESS OTHERWISE SPECIFIED
DECIMAL .X ± .030
DECIMAL .XX ± .010
DECIMAL .XXX ± .005
ANGLES ± 0° 30'
CODE IDENT. NUMBER 0LSP2

api technologies corp.
FAIRVIEW PENNSYLVANIA

DWN. P. Wells
DATE 3-19-14
ENGR. R. Devine
SHEET 1 OF 1

Description
Pi
RESIN SEAL FILTER

SCIF-3313-000

Quality Products From The Specialists In Electro—Magnetic Compatibility