CASE FINISH	CURRENT (AMPS)	WORKING VOLTAGE				MAXIMUM DC RESISTANCE (OHMS)	MAXIMUM VOLTAGE DROP		MINIMUM CAPACITANCE (uF)	MIN. INSERTION LOSS PER MIL-STD-220, FULL LOAD, +25°C												
		-55°C TO +85°C		-55°C TO +125°C																		
		AC	DC	AC	DC		DC	AC		14 KHz	30 KHz	50 KHz	75 KHz	100 KHz	150 KHz	300 KHz	500 KHz	1 MHz	10 MHz	100 MHz	1 GHz	10 GHz
01 TIN	15	---	80	---	50	0.005	0.075	--	1.4	--	17	--	--	--	27	34	--	44	60	70	70	--

PART MARKING:

9004F-100-2017
SCI DATE CODE

BUBBLE PACK MARKING:

9004F-100-2017
SCI DATE CODE
LOT NUMBER
QTY/PACK

MARKING NOTES:

N/A

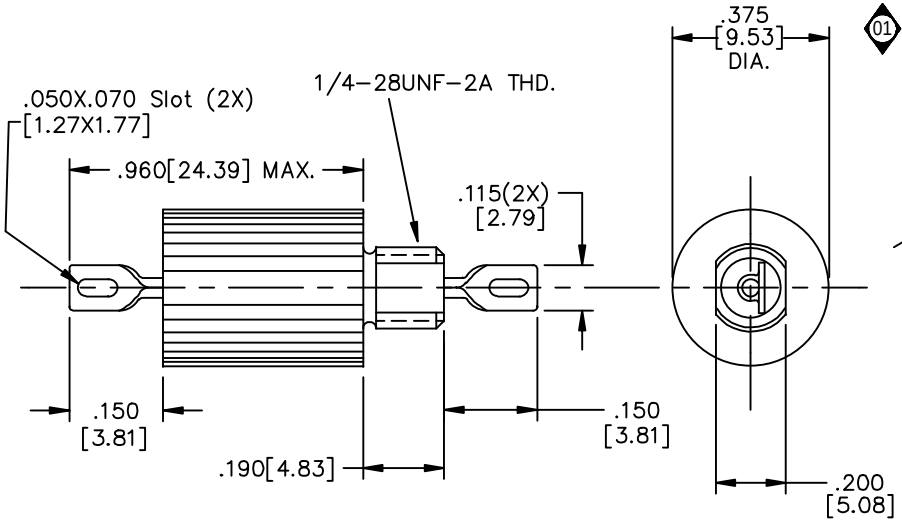

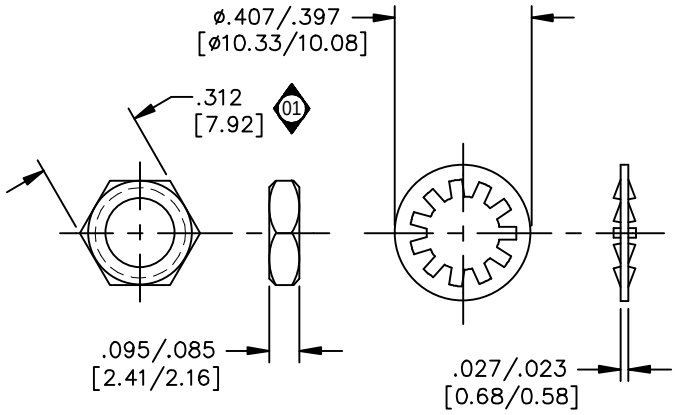

SCHEMATIC

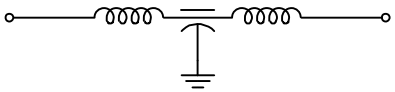

MTG. HARDWARE

RoHS COMPLIANT

NOTES:

01

1) MOUNTING TORQUE NOT TO EXCEED 7in-lbs.
2) MAX. REFLOW TEMP. 260°C FOR 5 SEC.

REV. NO.	CHANGE NOTICE
00	CN 27183-CPD
01	CN 31295-CPD

UNLESS OTHERWISE SPECIFIED DIMENSIONS ARE IN INCHES[mm]. DO NOT SCALE.

THIRD ANGLE PROJECTION

TOLERANCES UNLESS OTHERWISE SPECIFIED
Fractions ±
Dec. .xx±
Dec. .xxx± .010
Angles ±0° 30'

CODE IDENT. NO. OLSP2

SPECTRUM CONTROL INC.

FAIRVIEW PENNSYLVANIA

Dwn. KAUFFMAN
Date 10-09-06
Engr. R. Struchen
Sheet 1 of 1

Description Low Pass EMI Filter

9004F-100-2017

Quality Products From The Specialists In Electro-Magnetic Compatibility